736

Application：Portable Power Tool、Gardening Tool
用途：電動工具、園林工具

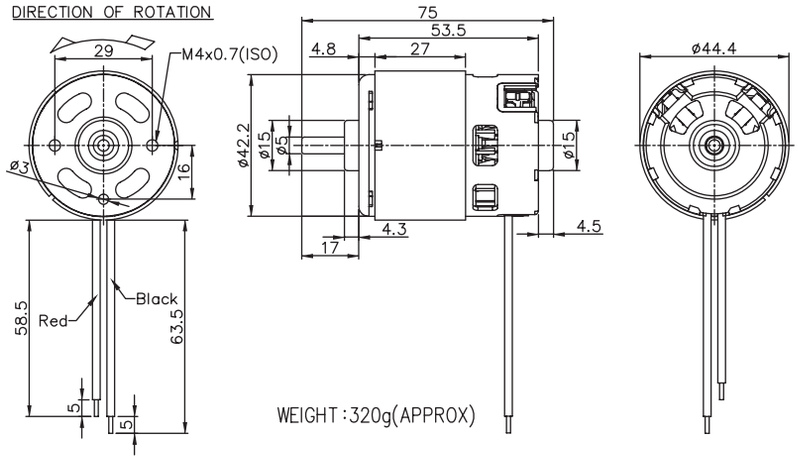

MODEL	VOLTAGE		NO LOAD		AT MAXIMUM EFFICIENCY						STALL		
	OPERATING RANGE	NOMNAL	SPEED	CURRENT	SPEED	CURRENT	TORQUE		OUTPUT	EFF	CURRENT	TORQUE	
			rpm	A	rpm	A	g-cm	mN-m	W	%	A	g-cm	mN-m
736-8017-R	12.0 - 24.0	18.0V CONSTANT	20000	3.60	17241	19.65	1426	139.80	252.48	75	137.35	11700	1147.1
736-8514-R	9.6 - 18.0	14.4V CONSTANT	20000	4.20	16920	19.97	1195	117.16	207.65	73	142.07	9830	963.7
736-8514-R	10.0 - 18.0	18.0V CONSTANT	24000	4.30	20877	22.21	1309	128.33	280.64	73	167.31	11400	1117.7
736-9015-R	9.6 - 18.0	14.4V CONSTANT	18600	4.00	15552	19.13	1216	119.22	194.21	71	137.30	10467	1026.2
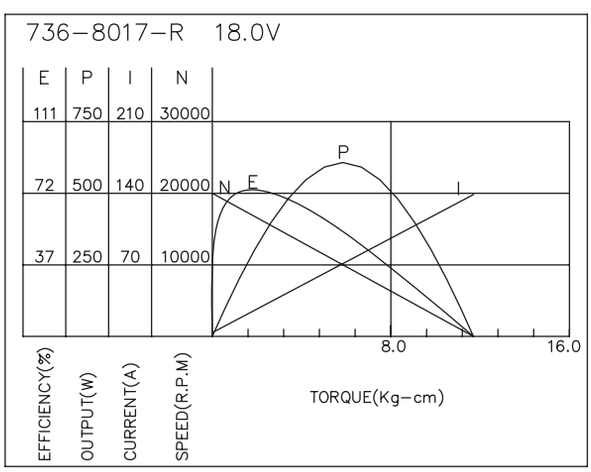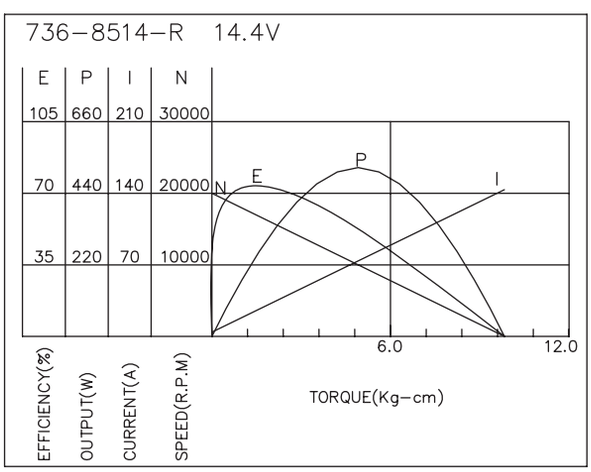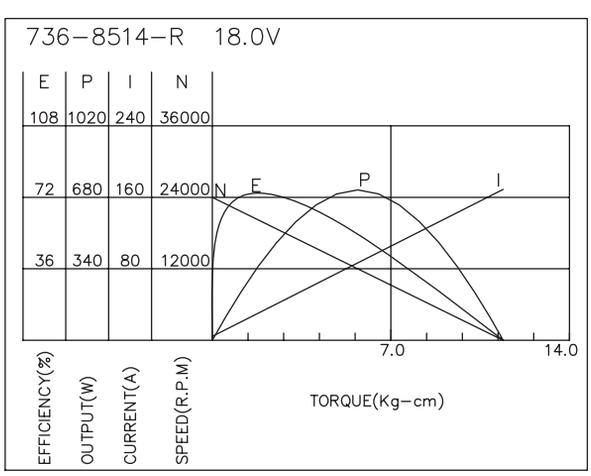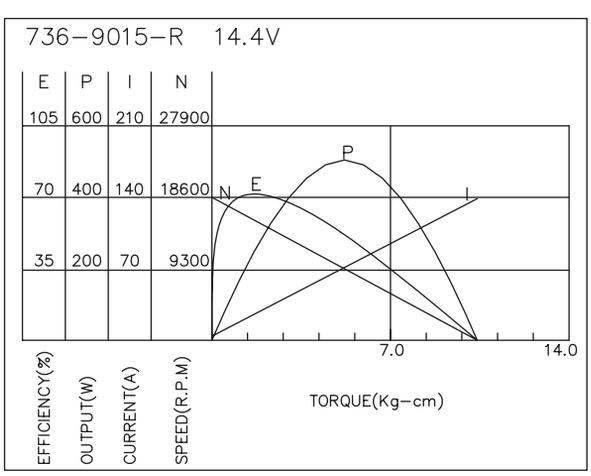
馬達的出軸長度及性能參數，EMC 對策可依客人要求做調整，詳情可詢問相關業務人員。
Please inquire your sales representative for output,performance and EMC solution.