BL48F15

Application：Portable Power Tool
用途：電動工具

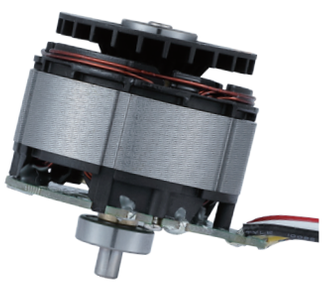

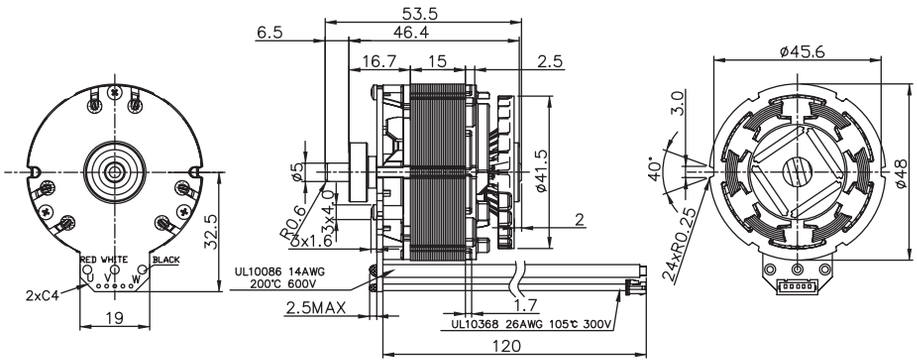

WEIGHT：330g(APPROX)

LEADWIRE SPECIFICATION AND FUNCTION								
ITEMS	HALL SENSOR LEADWIRE					MOTOR COIL		
LEADWIRE	+3.3V	HW	HU	GND	HV	U	V	W
COLOR	RED	GREEN	BLUE	BLACK	YELLOW	RED	WHITE	BLACK

External Controller
外 置 控 制 器

MODEL	VOLTAGE		NO LOAD		AT MAXIMUM EFFICIENCY						STALL		
	OPERATING RANGE	NOMINAL	SPEED	CURRENT	SPEED	CURRENT	TORQUE		OUTPUT	EFF	CURRENT	TORQUE	
			rpm	A	rpm	A	Kg-cm	N-m	W	%	A	Kg-cm	N-m
BL48F15S-18V16K180W-B1X0N	14.4-21.6	18.0V CONSTANT	16150	2.13	13966	14.37	1.28	0.13	183.73	78	92.37	9.38	0.92
BL48F15S-21.6V21K240W-B1X0N	14.4-21.6	21.6V CONSTANT	20500	2.40	18051	15.42	1.30	0.13	240.99	73	98.59	8.73	0.86

馬達的出軸長度及性能參數，EMC 對策可依客人要求做調整，詳情可詢問相關業務人員。
Please inquire your sales representative for output,performance and EMC solution.

BL48F15S-18V16K180W-B1X0N 18.0V

Volt	Amp	Eff(%)	W(out)	kRPM
20.0	100.00	100	400.0	20.0
18.0	90.00	90	360.0	18.0
16.0	80.00	80	320.0	16.0
14.0	70.00	70	280.0	14.0
12.0	60.00	60	240.0	12.0
10.0	50.00	50	200.0	10.0
8.0	40.00	40	160.0	8.0
6.0	30.00	30	120.0	6.0
4.0	20.00	20	80.0	4.0
2.0	10.00	10	40.0	2.0
0.0	0.00	0	0.0	0.0

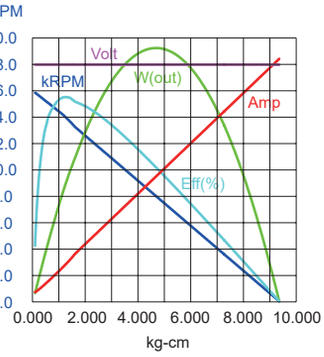

BL48F15S-21.6V21K240W-B1X0N 21.6V
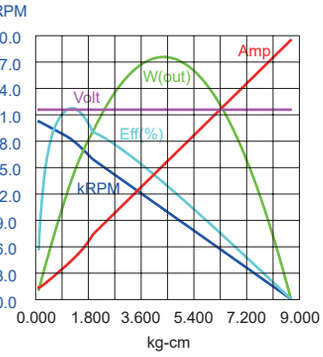
Volt	Amp	Eff(%)	W(out)	kRPM
30.0	100.00	100	500.0	30.0
27.0	90.00	90	450.0	27.0
24.0	80.00	80	400.0	24.0
21.0	70.00	70	350.0	21.0
18.0	60.00	60	300.0	18.0
15.0	50.00	50	250.0	15.0
12.0	40.00	40	200.0	12.0
9.0	30.00	30	150.0	9.0
6.0	20.00	20	100.0	6.0
3.0	10.00	10	50.0	3.0
0.0	0.00	0	0.0	0.0